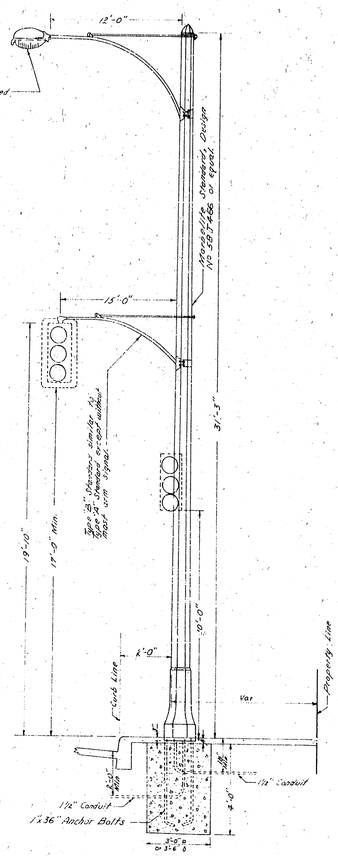

TYPE III(c) STANDARD, as shown
TYPE X(c) STANDARD, without mast arm signal

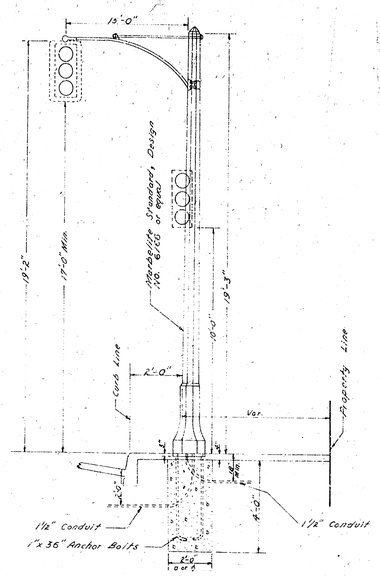

TYPE II(c) STANDARD

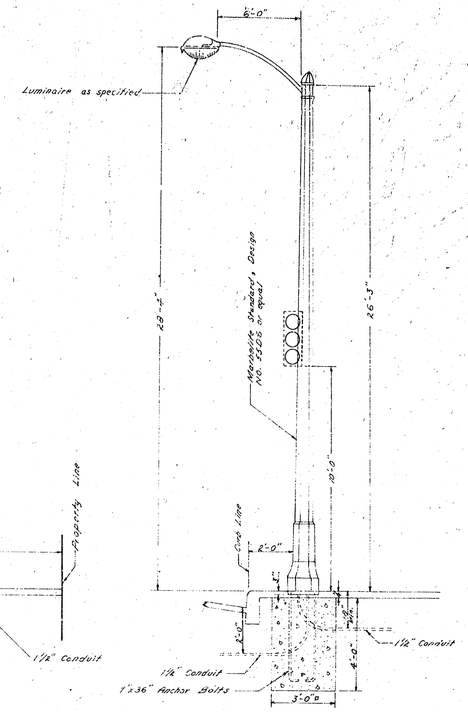

TYPE X (c) STANDARD
(SP)

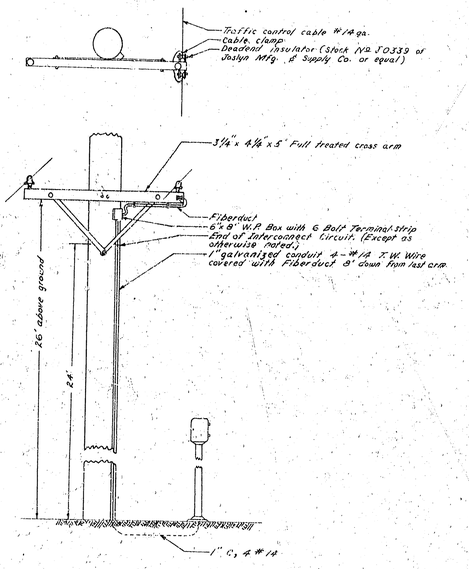

INTERCONNECT DETAILS

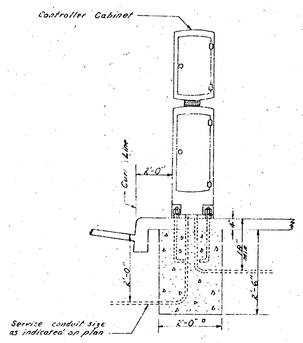

Anchor bolts required (qty.) 4 - 1¾" dia. (10" x 3'), 2-nuts & washers per bolt. Minimum thread length 6" (to project 2¼" above foundation grade).
Concrete thud - flush top 2'x2'x3'.

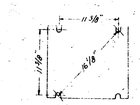

ANCHOR BOLT LAYOUT

SQUARE PEDESTAL CABINET & BASE

APPROVED 19		DEPARTMENT OF ENGINEERING
CITY ENGINEER		CITY OF SAN BERNARDINO
REGISTERED CIVIL ENGINEER NO. .		
DRAWING NO. 2219	DRAWN BY Harrel	STANDARD DETAILS
SHEET 8 OF 10 SHEETS	CHECKED BY	
	RECOMMENDED	

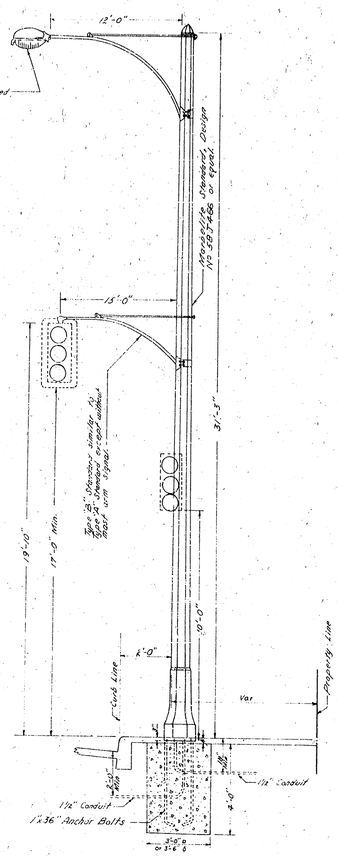

TYPE III(c) STANDARD, as shown
TYPE X(c) STANDARD, without mast arm signal

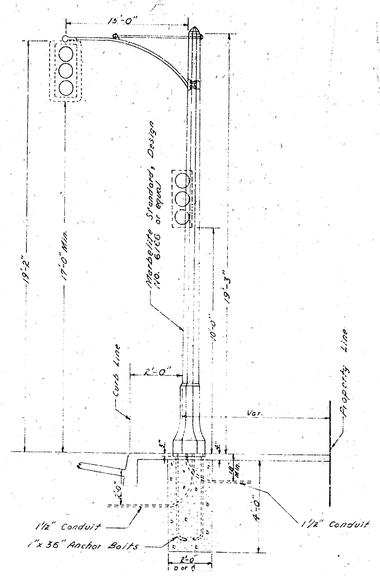

TYPE II(c) STANDARD

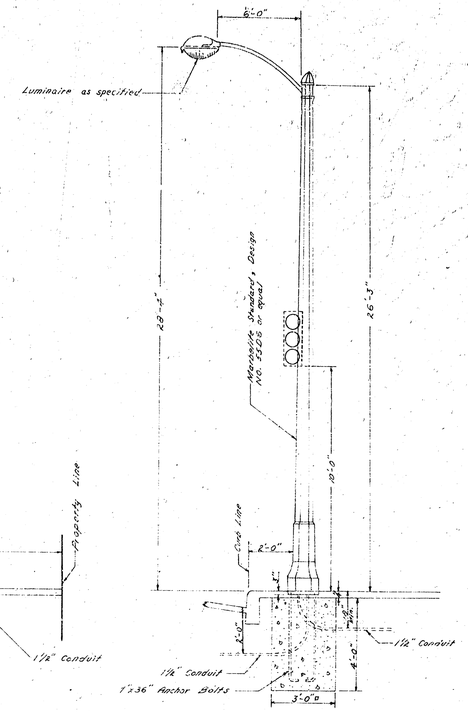

TYPE X (c) STANDARD
(SP)

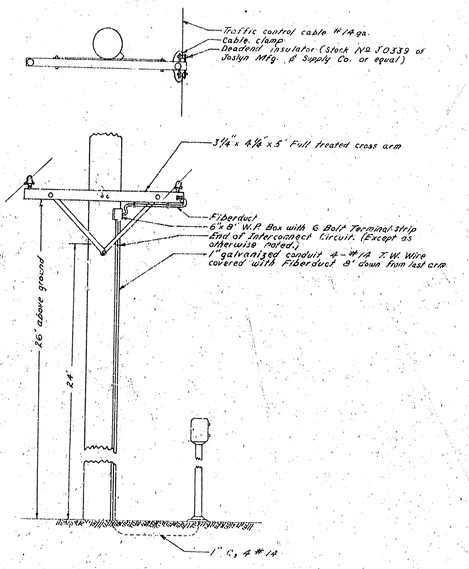

INTERCONNECT DETAILS

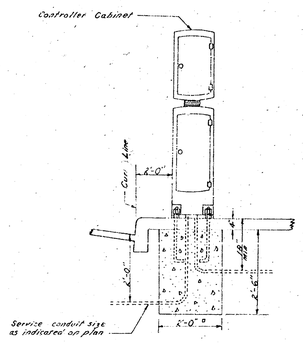

Anchor bolts required (qty.) 4 - 1¾" dia. (10" x 3'), 2-nuts & washers per bolt. Minimum thread length 6" (to project 2¼" above foundation grade).
Concrete thud - flush top 2'x2'x3'.

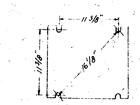

ANCHOR BOLT LAYOUT

SQUARE PEDESTAL CABINET & BASE

APPROVED 19		DEPARTMENT OF ENGINEERING
CITY ENGINEER		CITY OF SAN BERNARDINO
REGISTERED CIVIL ENGINEER NO. .		
DRAWING NO. 2219	DRAWN BY Harrel	STANDARD DETAILS
SHEET 8 OF 10 SHEETS	CHECKED BY	
	RECOMMENDED	